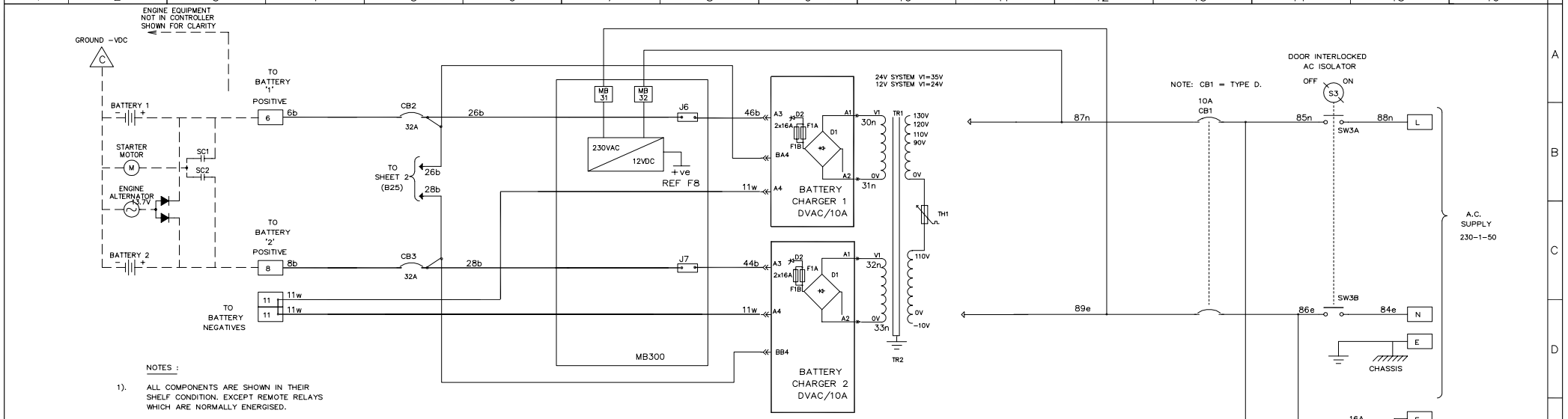

NOTES :

1). ALL COMPONENTS ARE SHOWN IN THEIR SHELF CONDITION. EXCEPT REMOTE RELAYS WHICH ARE NORMALLY ENERGISED.

2). BATTERY CHARGERS 1 & 2 ARE PART SHOWN ON SHEET 2 AND INDENTIFIED AS BAC & BBC RESPECTIVELY.

3). CABLE COLOURS ARE AS FOLLOWS : w = WHITE, e = BLUE, b = BLACK & n = BROWN.

MOTHERBOARD MB300 JUMPER SETTINGS

GND AIN01
mA

DAUGHTERBOARD DB300 JUMPER SETTINGS

J17,J18 0-10AMPS CHARGER (OPTION J)
OR
J17,J18 0-20AMPS CHARGER (OPTION JJ)

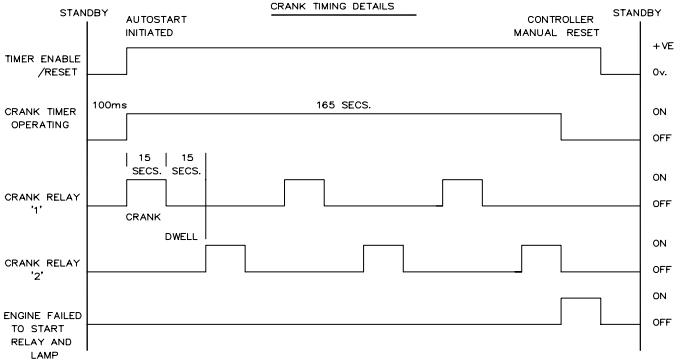

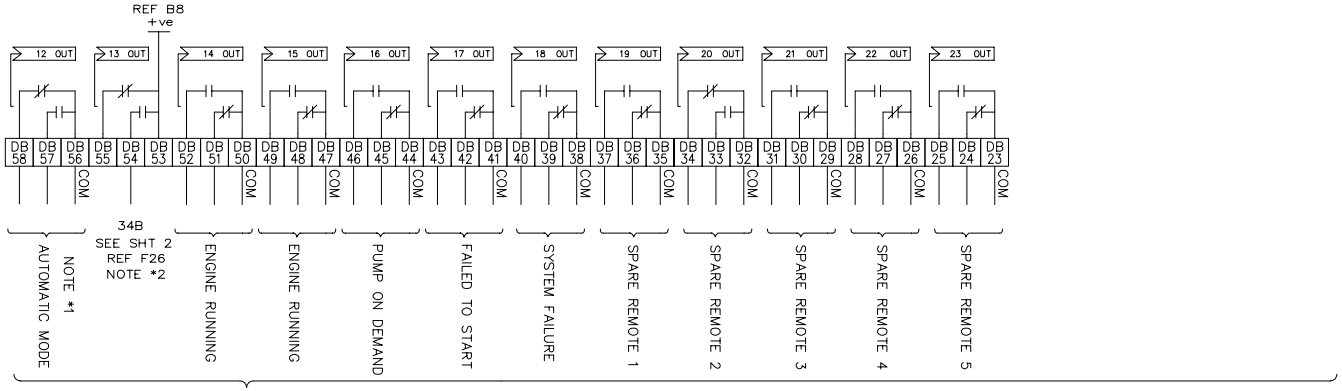

VOLTFREE MONITOR CONTACTS
(125VAC, 5AMPS, NON INDUCTIVE LOADS ONLY)
CONTACTS SHOWN IN NORMAL, NON-ALARM CONDITION, TYPICAL

NOTE *1
CONTACTS ALSO CHANGEOVER IF DC POWER IS COMPLETELY LOST
NOTE *2
CONTACTS CHANGEOVER WHEN PROCESSOR FAILS

CONTROLLED DOCUMENT
THIS DRAWING IS FM APPROVED AND MUST NOT BE MODIFIED WITHOUT THEIR CONSENT

FD4e V4 SAMPLE DRAWINGS
SHOWING OPTIONS E1D & U3 – NEMA 2
SAMPLE

ISSUE 1	ISSUE 2	ISSUE	ISSUE	ISSUE	ISSUE	ISSUE	ISSUE
INITIAL DRAWING .	CUSTOMER ISSUE						
9–MAY–09	22.1.2010						

C.A.D. Software AUTOCAD
LAST WIRE No...
SERIAL No. 000000–00

© THIS DRAWING IS THE COPYRIGHT OF METRON–ELEDYNE AND MUST NOT BE LENT, COPIED OR REPRODUCED WITHOUT PRIOR PERMISSION.

ISSUE No.	
1	9–MAY–09
2	22.1.2010

DRN D.Ca
CHK
TITLE SCHEMATIC DIAGRAM FOR CONTROLLER TYPE FD4e (V4)

Metron–Eledyne Limited
GRANTHAM, ENGLAND
TELEPHONE (01476) 516120
WWW.METRONELEDYNE.CO.UK

DRG. No. SHT 1 OF 3
000000–00
AE2221

Metron Eledyne

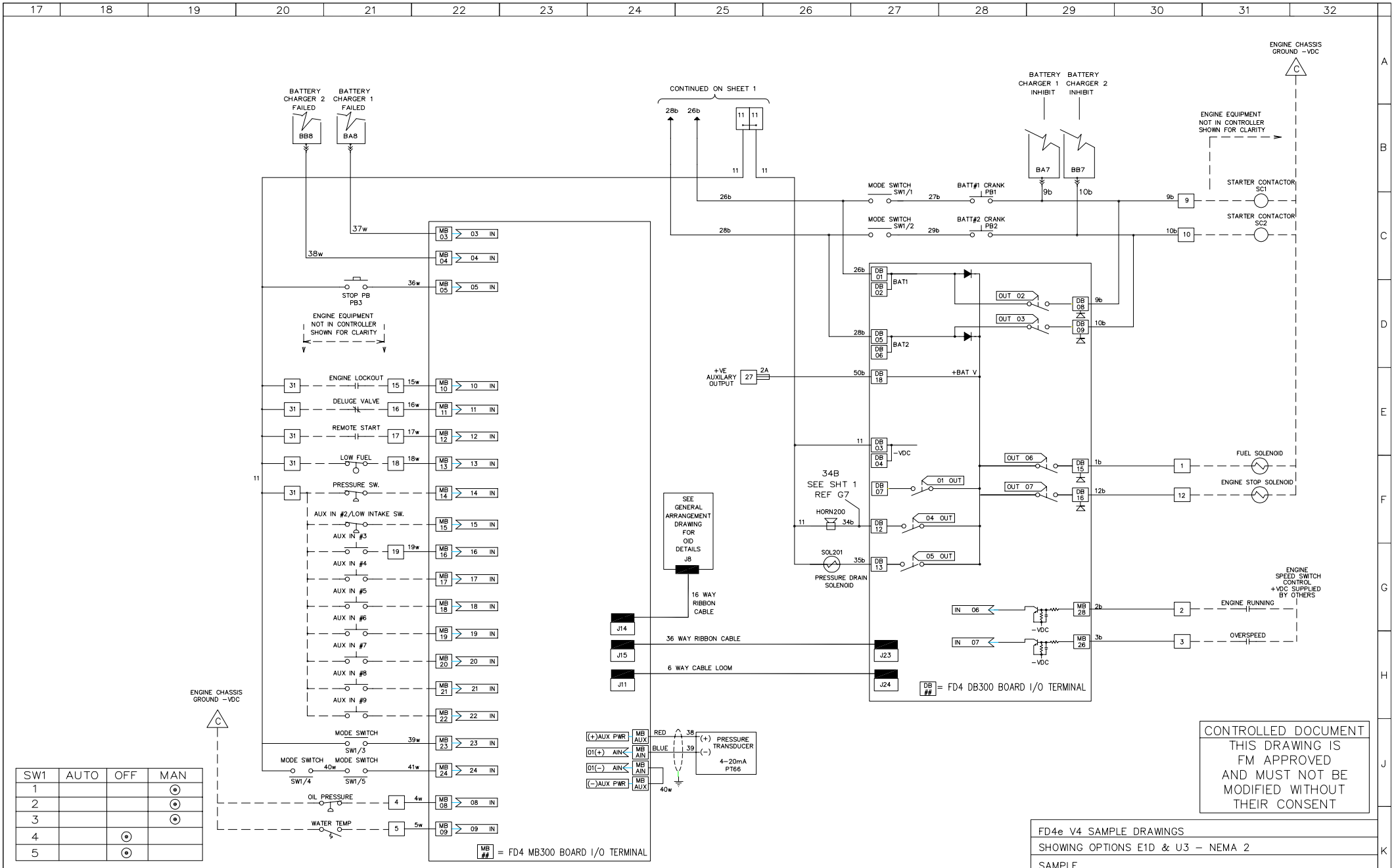

SW1	AUTO	OFF	MAN
1			⊙
2			⊙
3			⊙
4		⊙	
5		⊙	

CONTROLLED DOCUMENT
THIS DRAWING IS FM APPROVED AND MUST NOT BE MODIFIED WITHOUT THEIR CONSENT

FD4e V4 SAMPLE DRAWINGS
SHOWING OPTIONS E1D & U3 – NEMA 2
SAMPLE

ISSUE 1	ISSUE 2	ISSUE	ISSUE	ISSUE	ISSUE	ISSUE	ISSUE
SEE SHEET 1 FOR ISSUE AND REVISION DETAILS 9–MAY–09	CUSTOMER ISSUE: 22.1.2010						

C.A.D. Software AUTOCAD

SERIAL No. 000000–00

© THIS DRAWING IS THE COPYRIGHT OF METRON–ELEDYNE AND MUST NOT BE LENT, COPIED OR REPRODUCED WITHOUT PRIOR PERMISSION.

ISSUE No.	
1	9–MAY–09
2	22.1.2010

DRN	CHK
D.Ca	

TITLE
SCHEMATIC DIAGRAM FOR CONTROLLER TYPE FD4e (V4)

Metron–Eledyne Limited
GRANTHAM, ENGLAND
TELEPHONE (01476) 516120
WWW.METRONELEDYNE.CO.UK

DRG. No. SHT 2 OF 3
000000–00
AE2221

Metron Eledyne

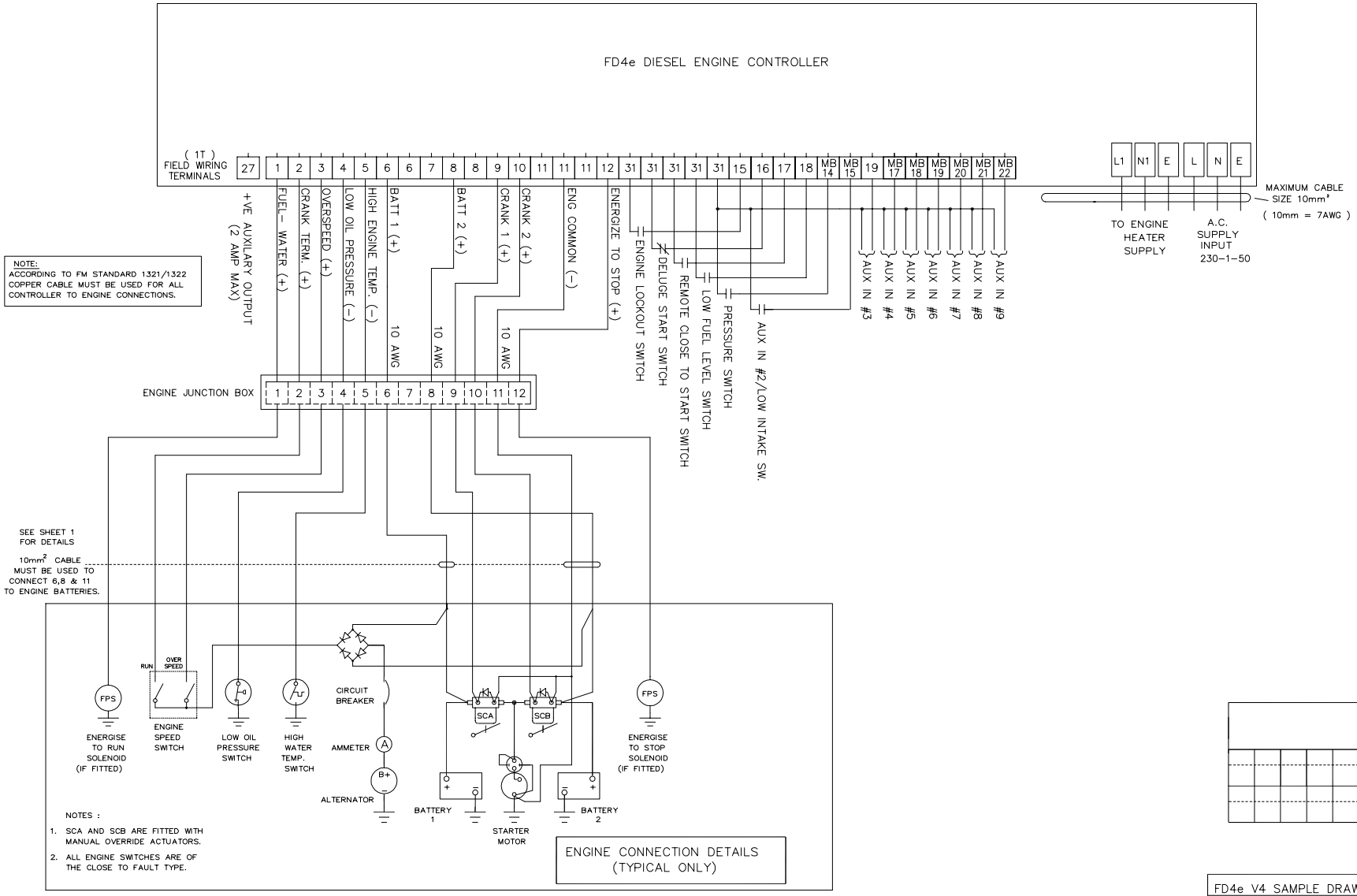

CONTROLLED DOCUMENT
THIS DRAWING IS FM APPROVED AND MUST NOT BE MODIFIED WITHOUT THEIR CONSENT

OPTIONS FITTED

							E1D					
							●					

FD4e V4 SAMPLE DRAWINGS
SHOWING OPTIONS E1D & U3 – NEMA 2
SAMPLE

ISSUE 1	ISSUE 2	ISSUE	ISSUE	ISSUE	ISSUE	ISSUE	ISSUE
SEE SHEET 1 FOR ISSUE AND REVISION DETAILS	CUSTOMER ISSUE:						
09–MAY–09	22.1.2010						

C.A.D. Software AUTOCAD

SERIAL No. 000000–00

© THIS DRAWING IS THE COPYRIGHT OF METRON–ELEDYNE AND MUST NOT BE LENT, COPIED OR REPRODUCED WITHOUT PRIOR PERMISSION.

ISSUE No.	
1	09–MAY–09
2	22.1.2010

DRN: D.Ca
CHK:

TITLE: SCHEMATIC DIAGRAM FOR CONTROLLER TYPE FD4e (V4)

Metron–Eledyne Limited
GRANTHAM, ENGLAND
TELEPHONE (01476) 516120
WWW.METRONELEDYNE.CO.UK

DRG. No. SHT 3 OF 3
000000–00
AE2221 /N

1	2	3	4	5	6	7	8	9	10	11

CONTROLLED DOCUMENT
THIS DRAWING IS FM APPROVED AND MUST NOT BE MODIFIED WITHOUT THEIR CONSENT

CONNECTIONS 'A' AND 'B' ARE 1/2" (M) NPT.

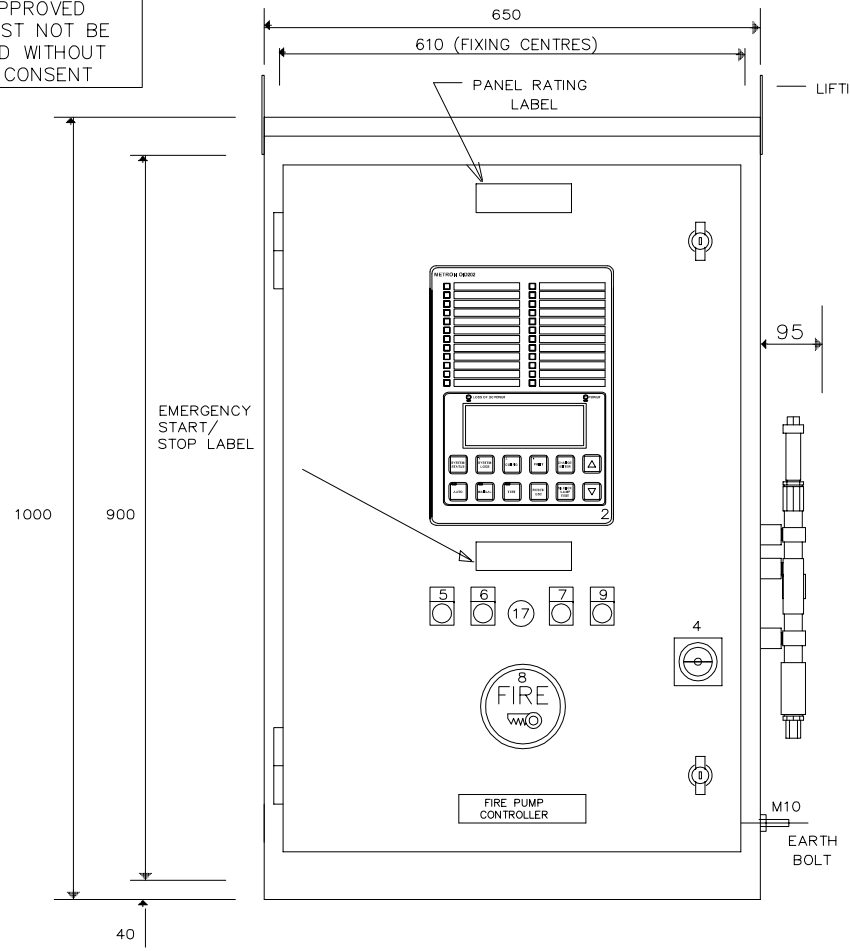

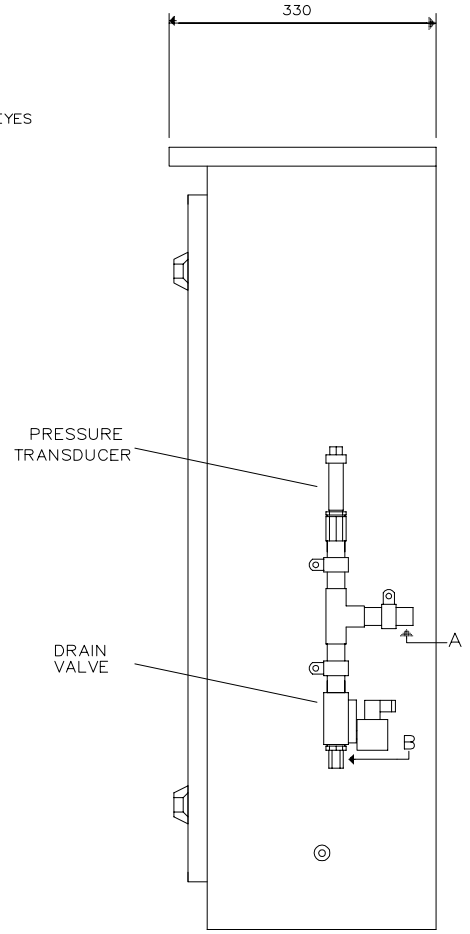

	DESCRIPTION	
2	OID202 OPERATOR INTERFACE DISPLAY	
3		
4	AC ISOLATOR (DOOR INTERLOCKED)	SW3
5	CRANK 1 BUTTON	PB1
6	CRANK 2 BUTTON	PB2
7	MODE KEY-SWITCH (AUTO-OFF-MAN)	SW1
8	BREAK GLASS MODULE (MODE KEY INSIDE)	
9	STOP PUSHBUTTON	PB3
10		
11		
12		
13		
14		
15		
16		
17	ELECTRONIC SOUNDER	
18		

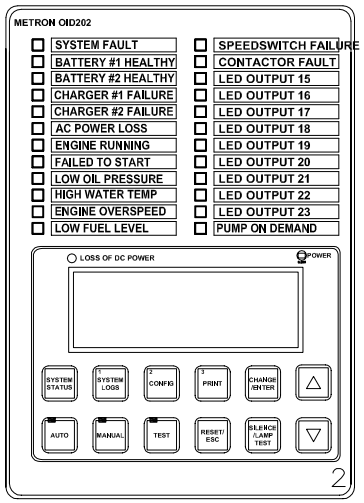

FD4e V4 SAMPLE DRAWINGS

SHOWING OPTIONS E1D & U3 – NEMA 2

SAMPLE

ISSUE 1	ISSUE 2	ISSUE
INITIAL VERSION .	CUSTOMER ISSUE:	
09-MAY-09	22.1.2010	

SERIAL No. 000000-00

3RD ANGLE PROJECTION

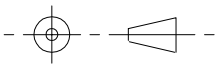

© THIS DRAWING IS THE COPYRIGHT OF METRON ELEDYNE DIVISION AND MUST NOT BE LENT, COPIED OR REPRODUCED WITHOUT PRIOR PERMISSION.

ISSUE No.	
1	9-MAY-09
2	22.1.2010

DRN	CHK
D.Ca	

TITLE
GENERAL ARRANGEMENT
CONTROLLER TYPE FD4e (V4)
NEMA 2

Metron-Eledyne LIMITED
GRANTHAM, ENGLAND
TELEPHONE (01476) 516120
WWW.METRONELEDYNE.CO.UK

DRG. No. 000000-00
AM3139

Metron Eledyne

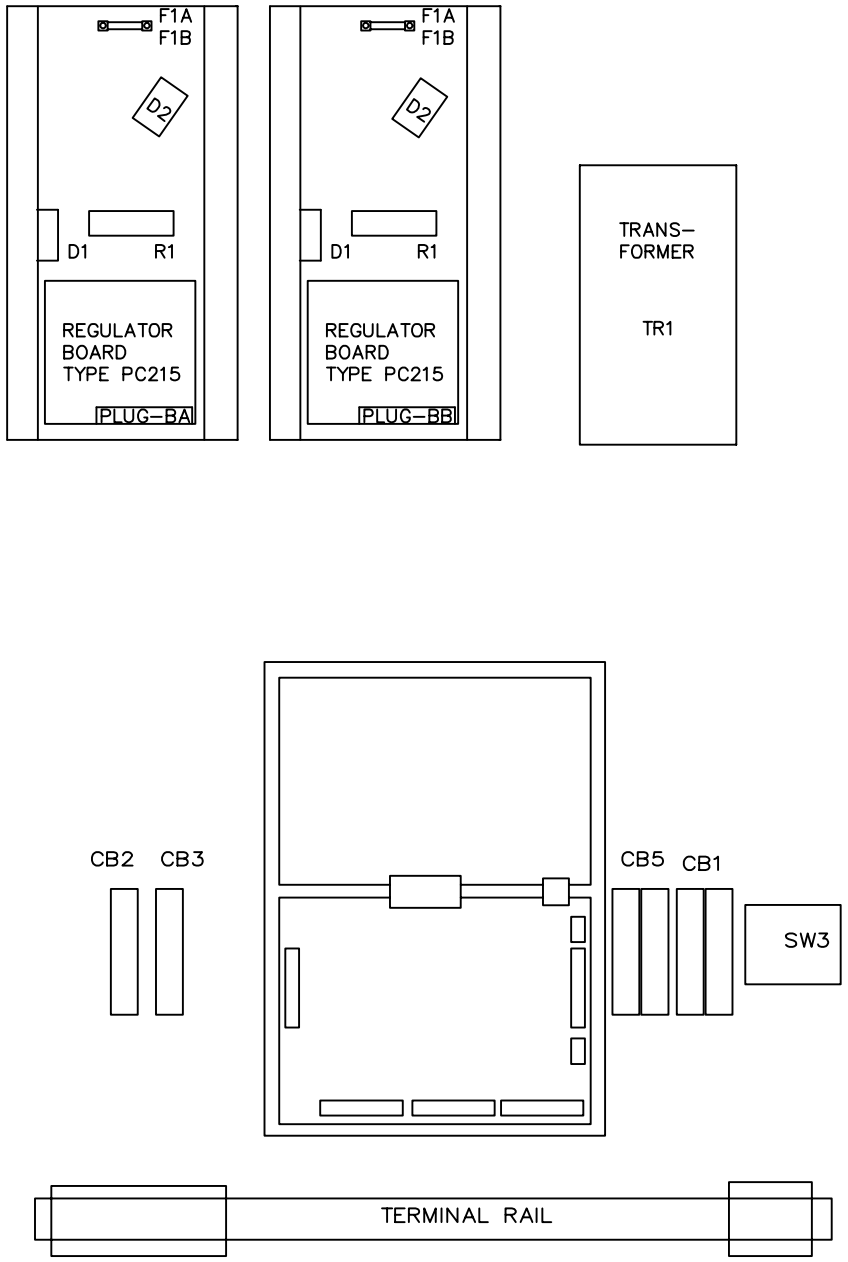

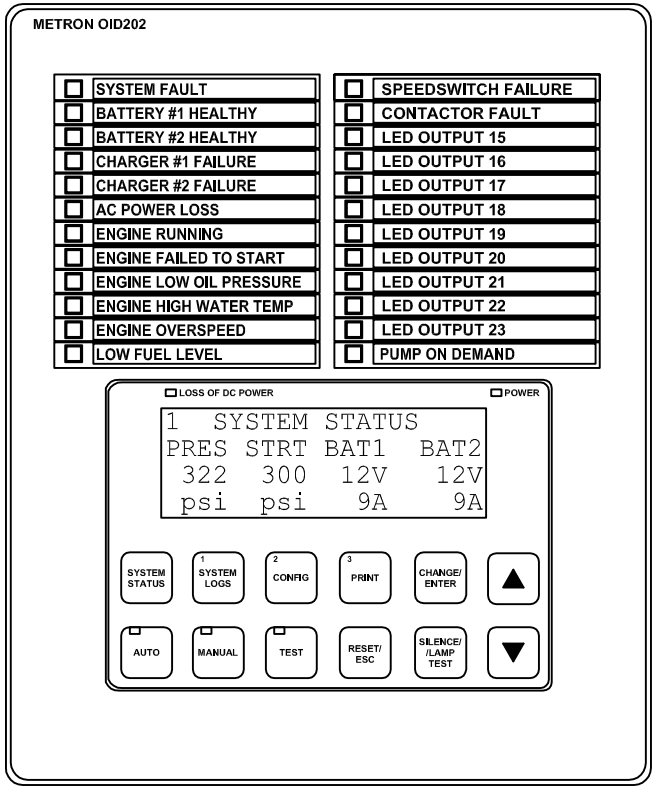

FD4e V4 SAMPLE DRAWINGS		
SAMPLE		
DRN D.Ca	CHK	TITLE FD4e INTERNAL LAYOUT & ANNUNCIATOR
SERIAL No: 000000–00 Metron–Eledyne		DRG. No. AE2221/I

ISSUED	
1	22.1.2010