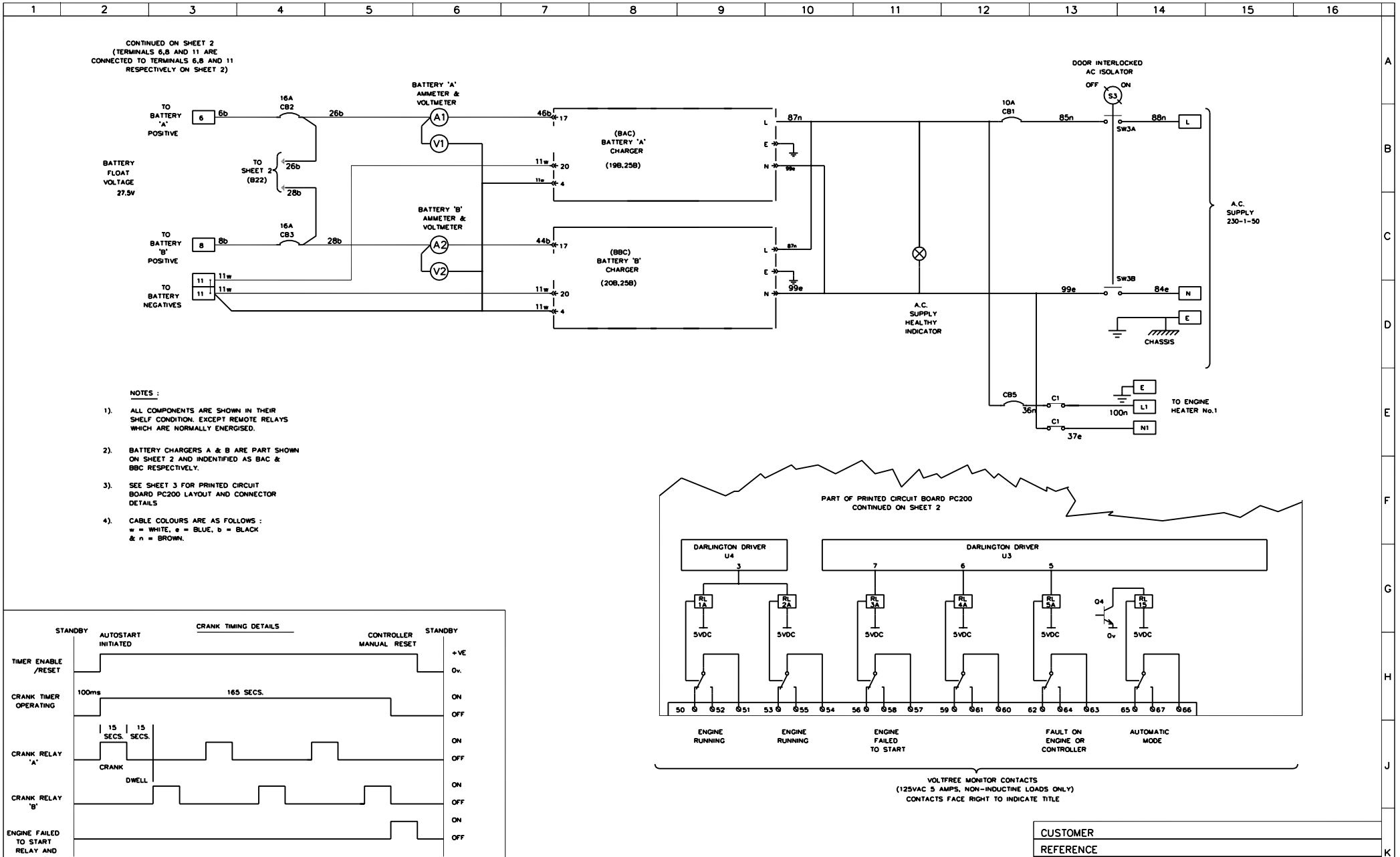


| ISSUE 1 | ISSUE 2 | ISSUE 3 | ISSUE 4 | ISSUE 5 | ISSUE 6 | ISSUE 7 | ISSUE 8 |
|---|---|---|---|---|---|---|---|
| INITIAL ISSUE 26.03.99 | CUSTOMER ISSUE 27.11.2006 | | | | | | |

C.A.D. Software AUTOCAD

LAST WIRE No...

SERIAL No. 00000-01

© THIS DRAWING IS THE COPYRIGHT OF METRON-ELEDYNE AND MUST NOT BE LENT, COPIED OR REPRODUCED WITHOUT PRIOR PERMISSION.

| ISSUE No. | |
|---|---|
| 1 | 25.03.99 |
| 2 | 27.11.2006 |

CUSTOMER

REFERENCE

PROJECT

| DRN | CHK |
|---|---|
| DCo | |

TITLE: SCHEMATIC DIAGRAM FOR CONTROLLER TYPE FD3e

METRON ELEDYNE LTD
GRANTHAM, ENGLAND
TELEPHONE +44 (0)1476 596120
WWW.METRONELEDYNE.CO.UK

DRG. No. DE1861 SHT 1 OF 3 00000-01

Metron Eledyne

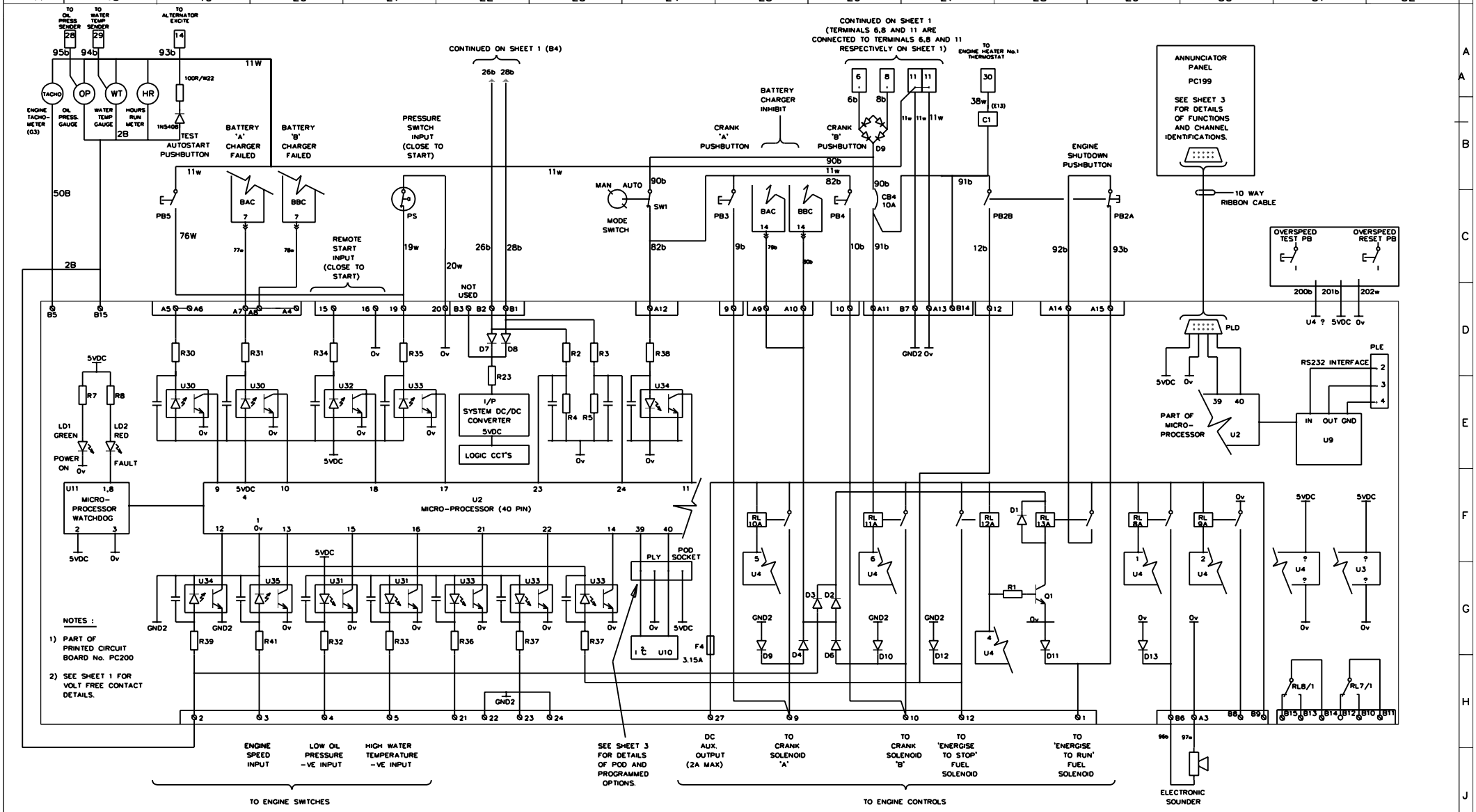


CUSTOMER
REFERENCE
PROJECT

| ISSUE 1 | ISSUE 2 | ISSUE 3 | ISSUE 4 | ISSUE 5 | ISSUE 6 | ISSUE 7 | ISSUE 8 |
|---|---|---|---|---|---|---|---|
| SEE SHEET 1 FOR ISSUE AND REVISION DETAILS | CUSTOMER ISSUE: | | | | | | |
| 26.03.99 | 27.11.2006 | | | | | | |

C.A.D. Software AUTOCAD

SERIAL No. 00000-01

© THIS DRAWING IS THE COPYRIGHT OF METRON-ELEDYNE AND MUST NOT BE LENT, COPIED OR REPRODUCED WITHOUT PRIOR PERMISSION.

| ISSUE No. | |
|---|---|
| 1 | 25.03.99 |
| 2 | 27.11.2006 |

DRN: DCa
CHK:

TITLE: SCHEMATIC DIAGRAM FOR CONTROLLER TYPE FD3e

METRON ELEDYNE LTD
GRANTHAM, ENGLAND
TELEPHONE +44 (0)1476 516120
WWW.METRONELEDYNE.CO.UK

DRG. No. DE1861 SHT 2 OF 3 00000-01

Metron Eledyne

NOTE :

1). SEE SHEET 1 FOR DETAILS OF REMOTE MONITOR CONNECTIONS AND AC/DC SUPPLY CONNECTIONS.

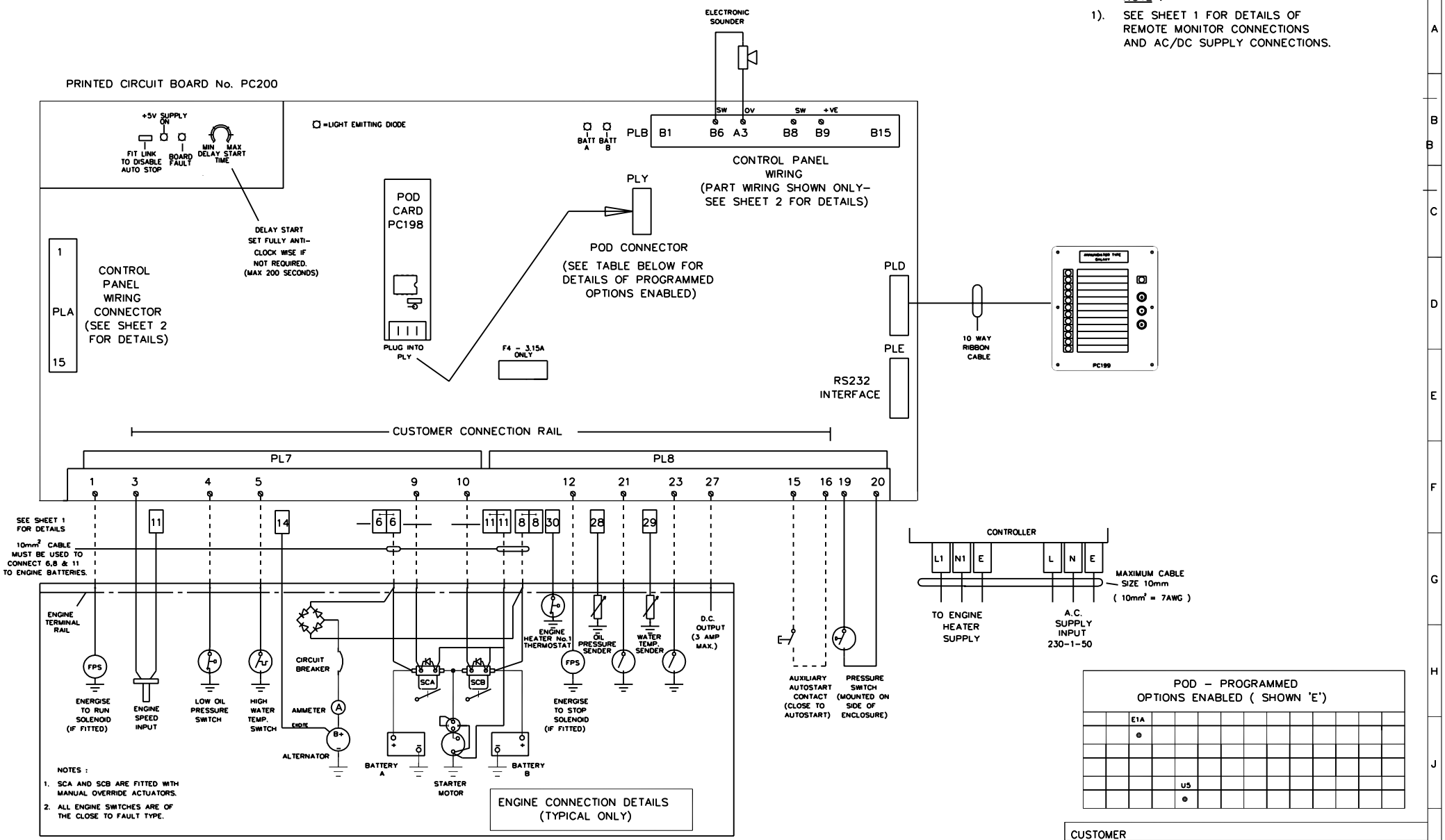


POD – PROGRAMMED OPTIONS ENABLED ( SHOWN 'E')

| | | | | | | | | | | | | | |
|---|---|---|---|---|---|---|---|---|---|---|---|---|---|
| | | E1A | | | | | | | | | | | |
| | | ● | | | | | | | | | | | |
| | | | | | | | | | | | | | |
| | | | | | | | | | | | | | |
| | | | | U5 | | | | | | | | | |
| | | | | ● | | | | | | | | | |

CUSTOMER

REFERENCE

PROJECT

| ISSUE 1 | ISSUE 2 | ISSUE 3 | ISSUE 4 | ISSUE 5 | ISSUE 6 | ISSUE 7 | ISSUE 8 |
|---|---|---|---|---|---|---|---|
| SEE SHEET 1 FOR ISSUE AND REVISION DETAILS | CUSTOMER ISSUE: | | | | | | |
| 26.03.99 | 27.11.2006 | | | | | | |

C.A.D. Software AUTOCAD

SERIAL No. 00000-01

© THIS DRAWING IS THE COPYRIGHT OF METRON-ELEDYNE AND MUST NOT BE LENT, COPIED OR REPRODUCED WITHOUT PRIOR PERMISSION.

| ISSUE No. | |
|---|---|
| 1 | 25.03.99 |
| 2 | 27.11.2006 |

DRN: DCo

CHK:

TITLE: SCHEMATIC DIAGRAM FOR CONTROLLER TYPE FD3e

METRON ELEDYNE LTD
GRANTHAM, ENGLAND
TELEPHONE +44 (0)1476 516120
WWW.METRONELEDYNE.CO.UK

DRG. No. DE1861 SHT 3 OF 3 00000-01

Metron Eledyne

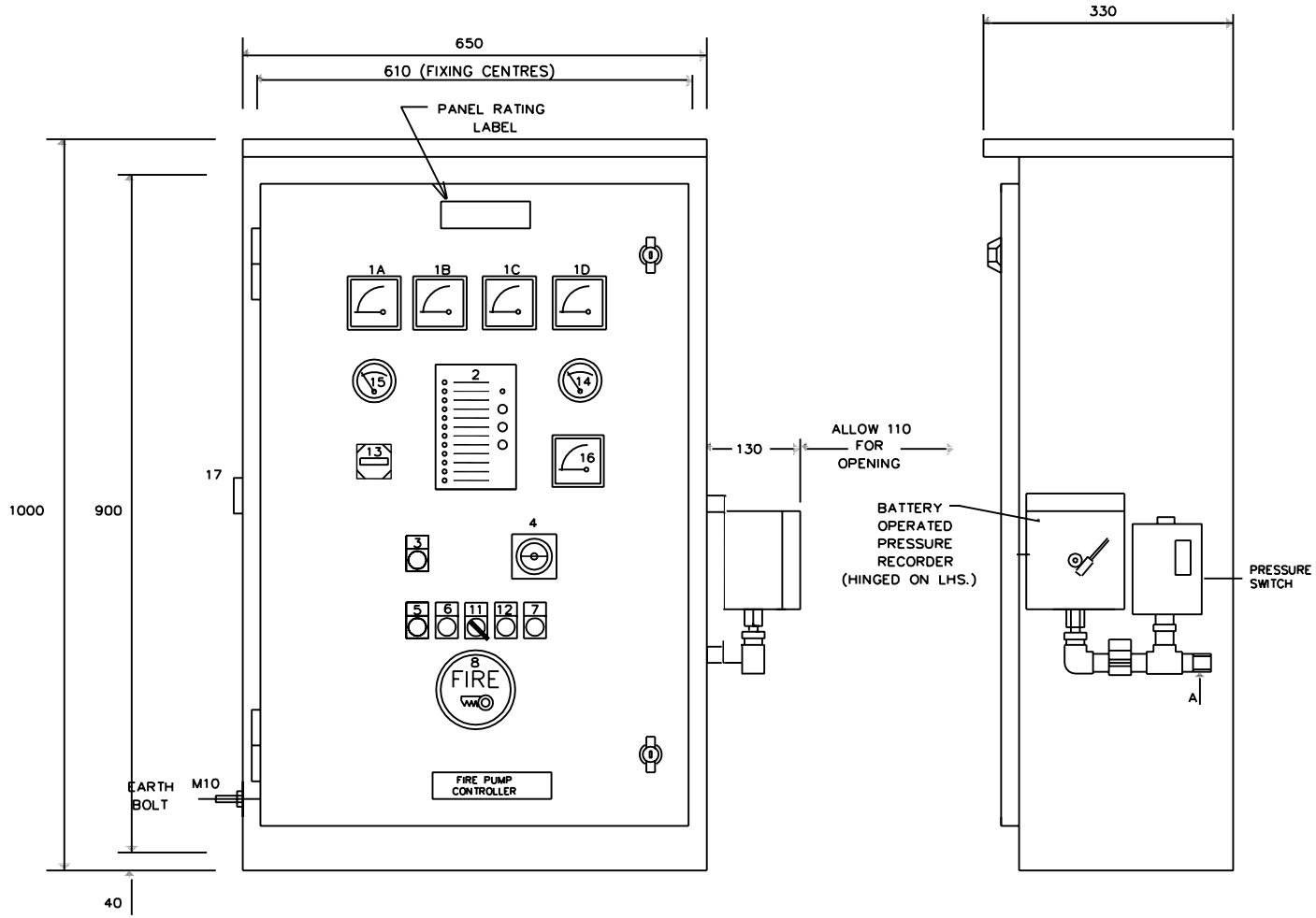


| | DESCRIPTION | |
|---|---|---|
| 1 | A=AMMETER A, B=VOLTMETER A<br>C=VOLTMETER B, D=AMMETER B. | |
| 2 | ANNUNCIATOR MODULE | |
| 3 | AC SUPPLY HEALTHY INDICATOR | |
| 4 | AC ISOLATOR (DOOR INTERLOCKED) | SW3 |
| 5 | CRANK A BUTTON | PB3 |
| 6 | CRANK B BUTTON | PB4 |
| 7 | STOP PUSHBUTTON | PB2 |
| 8 | BREAK GLASS MODULE (MODE KEY INSIDE) | |
| 9 | | |
| 10 | | |
| 11 | MODE SWITCH (MAN-AUTO) | SW1 |
| 12 | TEST START BUTTON | PB5 |
| 13 | ENGINE HOURS RUN METER | |
| 14 | WATER TEMPERATURE GAUGE | |
| 15 | OIL PRESSURE GAUGE | |
| 16 | ENGINE TACHOMETER | |
| 17 | ELECTRONIC SOUNDER | |

CONNECTIONS 'A' AND 'B' ARE 1/2" NPT.

ANNUNCIATOR LEGEND

AC/CHARGER FAIL
BATTERY A HEALTHY
BATTERY B HEALTHY
AUTO MODE
PUMP ON DEMAND
FAILED TO START
ENGINE RUN
ENGINE OVERSPEED
LOW OIL PRESSURE
HIGH WATER TEMP.

POWER ON
MUTE
RESET
L/TEST

CUSTOMER
REFERENCE
PROJECT

| ISSUE 2 | ISSUE 3 | ISSUE 4 |
|---|---|---|
| GENERAL LAYOUT CHANGE | CUSTOMER ISSUE: | |
| 7 - SEPT-05 | 27.11.2006 | |

SERIAL No. 00000-01

3RD ANGLE PROJECTION

| ISSUE No. | |
|---|---|
| 2 | 07-09-2005 |
| 3 | 27.11.2006 |

© THIS DRAWING IS THE COPYRIGHT OF METRON ELEDYNE DIVISION AND MUST NOT BE LENT, COPIED OR REPRODUCED WITHOUT PRIOR PERMISSION.

DRN: DCa
CHK:

TITLE
GENERAL ARRANGEMENT
CONTROLLER TYPE FD3e NEMA 2

METRON ELEDYNE LTD
GRANTHAM, ENGLAND
TELEPHONE +44 (0)1476 516120
WWW.METRONELEDYNE.CO.UK

DRG. No. 00000-01
AM2791

Metron Eledyne